esi | work gear

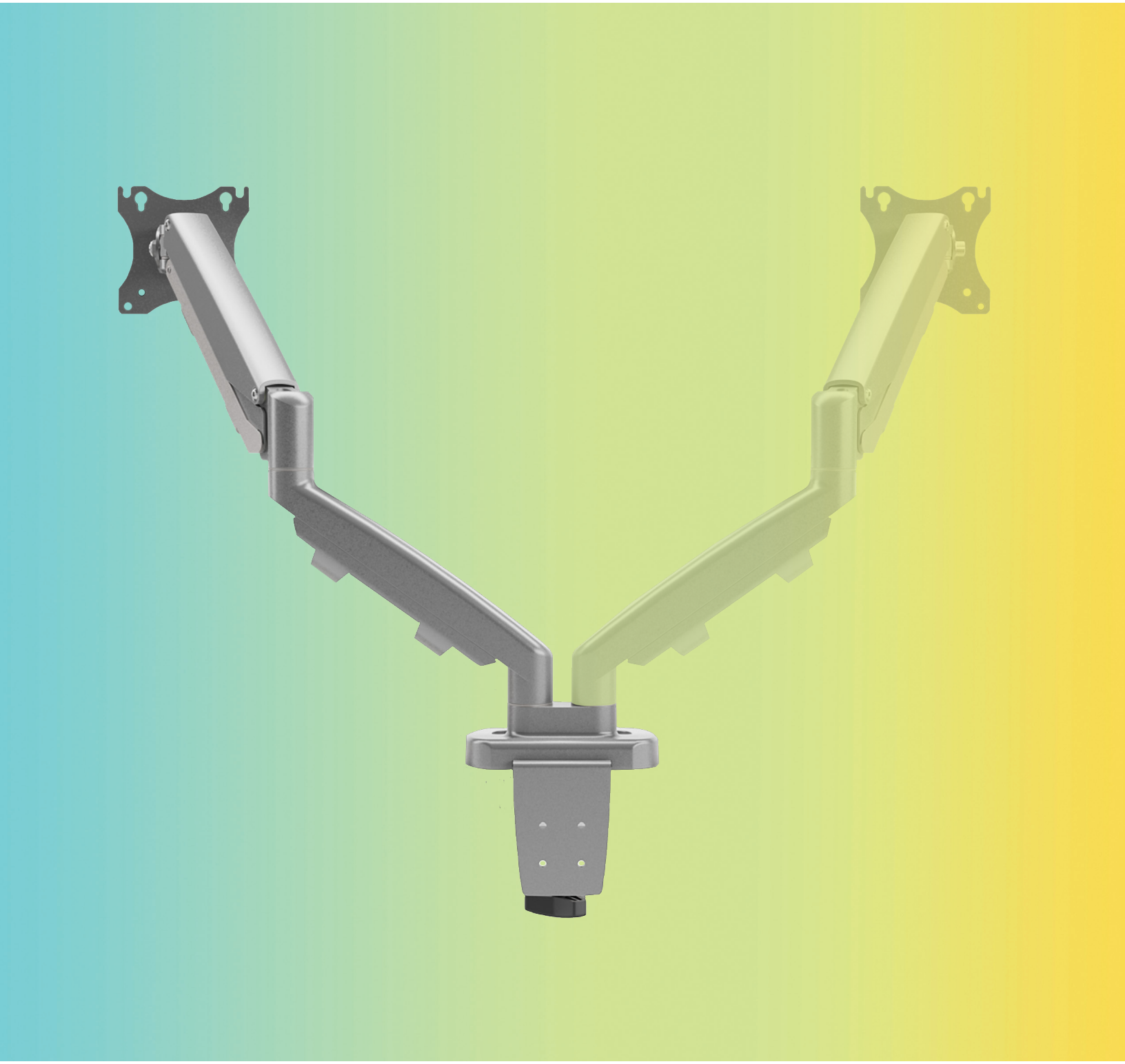

Eppa2™ kit

conversion kit

Fellowes Brands | FAMILY BUSINESS SINCE 1917

Eppa2kit

conversion kit

Kit includes:

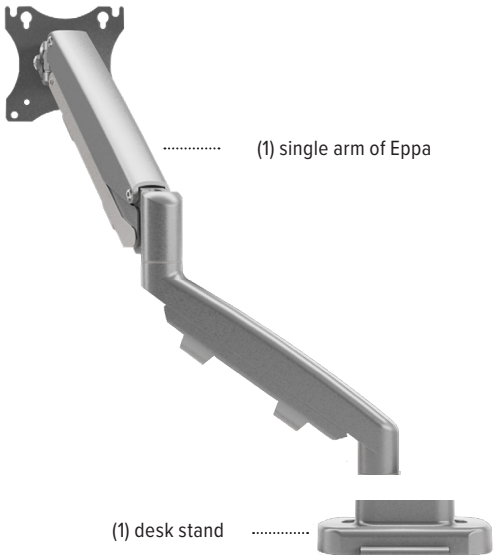

(1) grommet mount

(1) clamp

Product specs

Converts an existing Eppa single monitor arm to and Eppa2 dual arm

- Kit includes:
  - (1) one single arm
  - (1) one desk stand
  - (1) one clamp and grommet mount
- Finger touch dynamic height adjustment
- 10.5” height adjustment range
  - 5.8”–16.3” (low/high)
- 21.2” arm extension
- 4.0” arm retraction
- +90°/-25° tilt
- ±90° rotation
- ±90° monitor swivel stop
- 2.2 lbs.–17.6 lbs. weight capacity *(per arm)*
- VESA quick mount
- Partially assembled for quick installation
- Integrated cord management
- Grommet hole integrated in base to easily route cables
- Clip-on tool holder attaches to base bracket keeping hex keys accessible
- Warranty: 10 yrs.

Model #	List price
EPPA2KIT-SLV	$263

esi

800.833.3746
esiergo.com

© 2018 Fellowes, Inc.

Eppa2kit

conversion kit

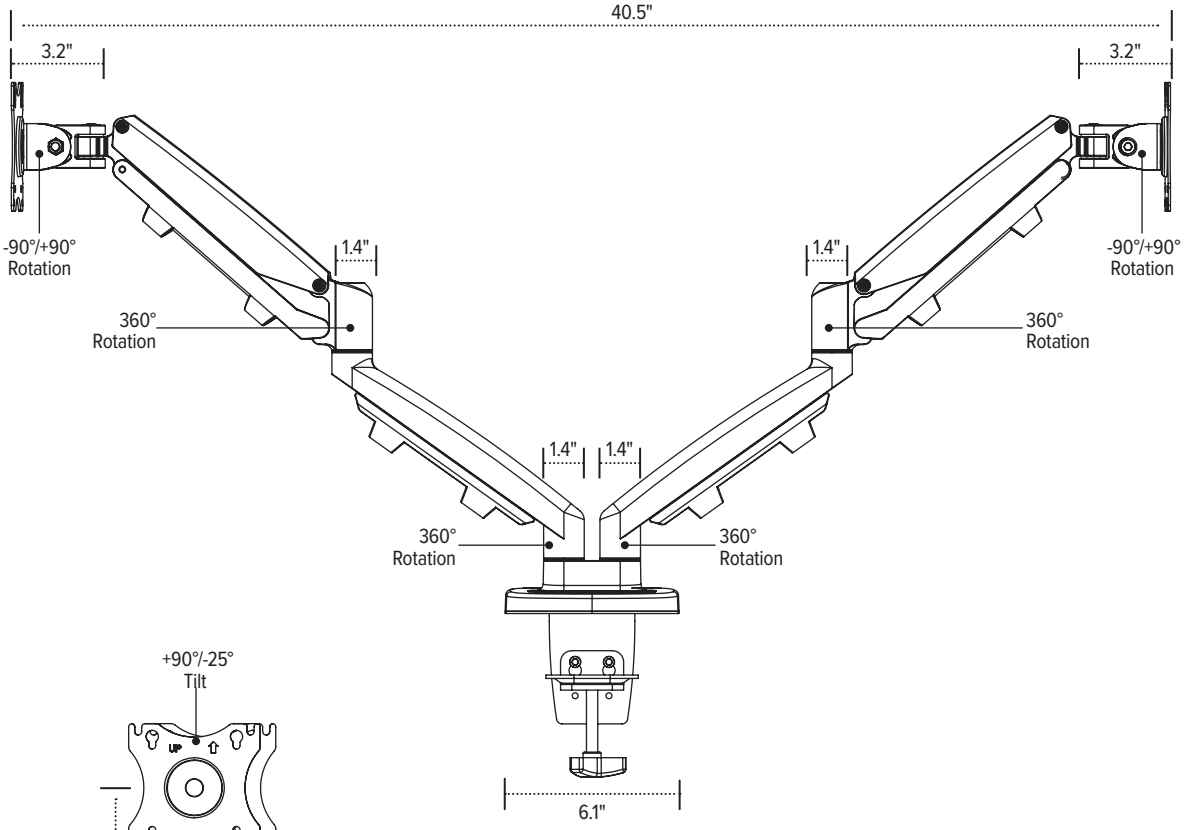

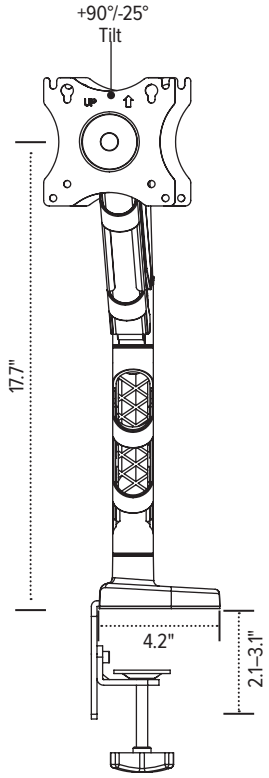

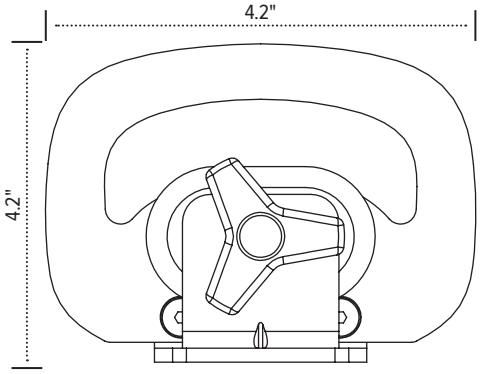

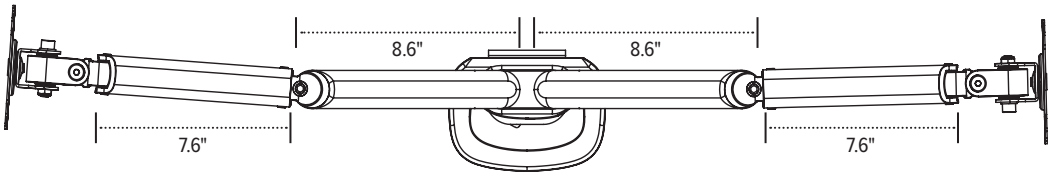

esi

800.833.3746
esiergo.com

© 2018 Fellowes, Inc.