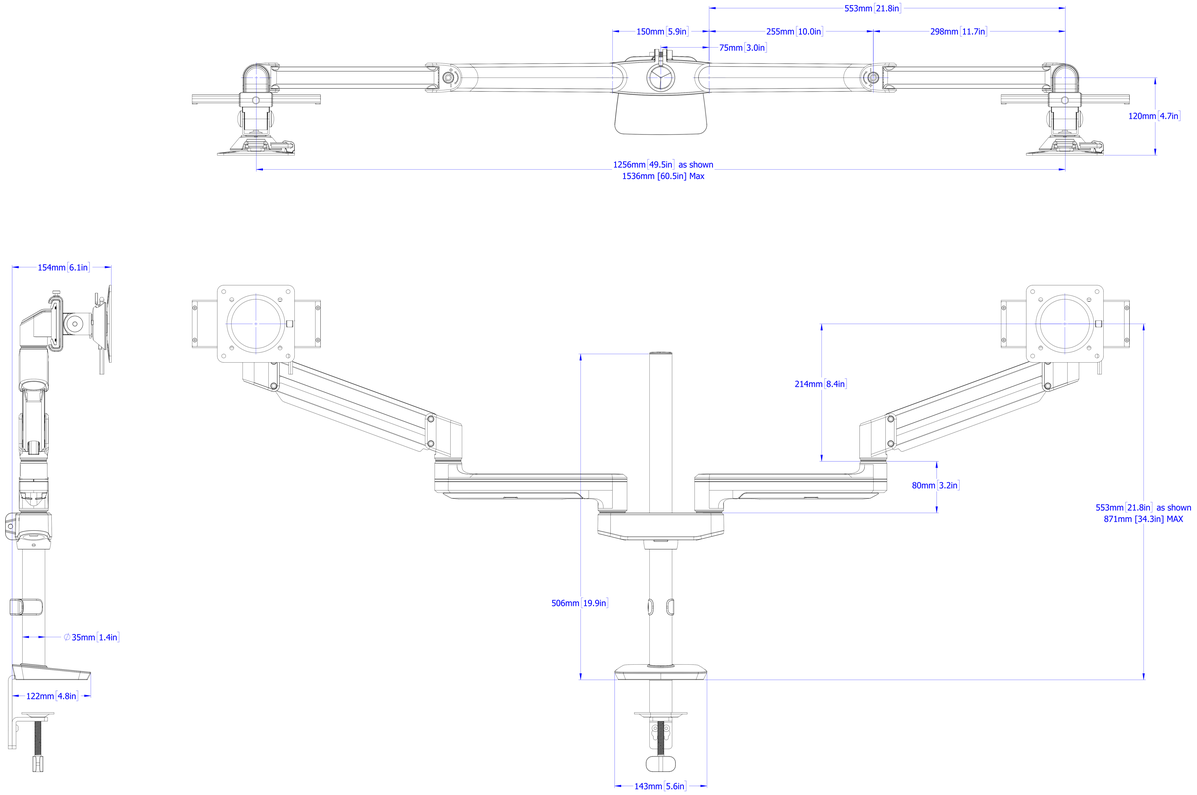
553mm 21.8in
150mm 5.9in
255mm 10.0in
298mm 11.7in
75mm 3.0in
120mm 4.7in
1256mm 49.5in as shown
1536mm [60.5in] Max
154mm 6.1in
214mm 8.4in
80mm 3.2in
553mm 21.8in as shown
871mm [34.3in] MAX
506mm 19.9in
∅35mm 1.4in
122mm 4.8in
143mm 5.6in

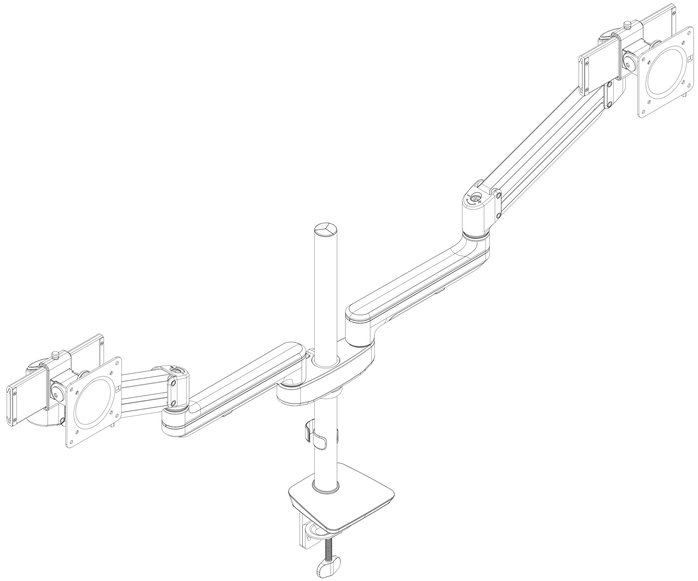

SENAEX2-FMS