esi | work gear

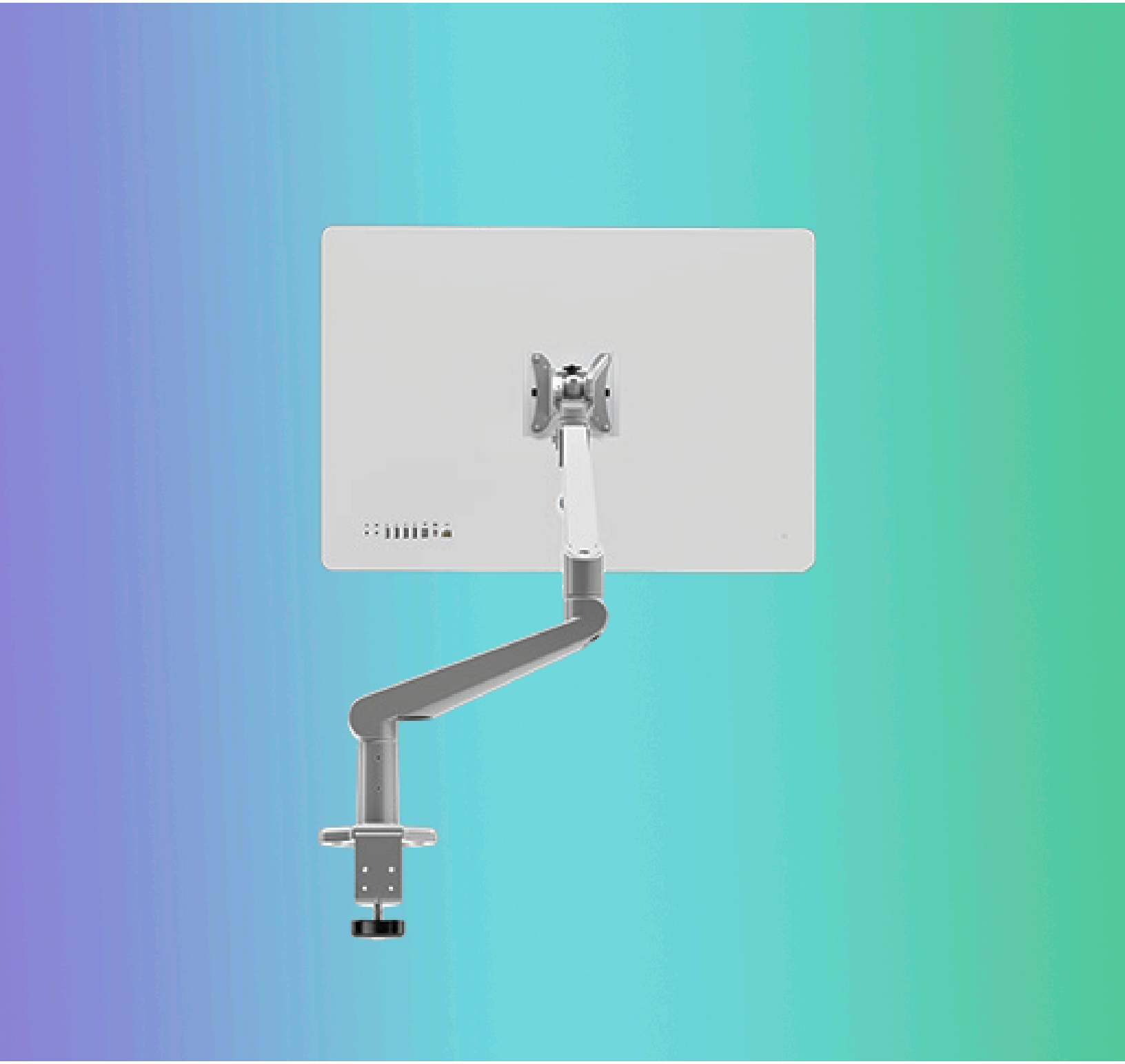

Edge-Max®

heavy duty single monitor arm

Fellowes Brands. FAMILY BUSINESS SINCE 1917

Edge-Max

heavy duty single monitor arm

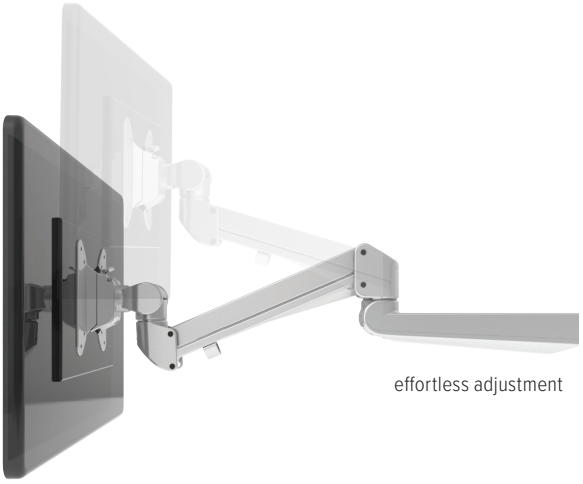

effortless adjustment

cable management

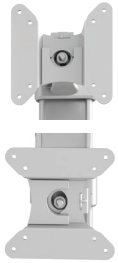

landscape/portrait rotation

grommet mount

desk clamp

integrated allen wrench storage

VESA quick mount

Product Specs

- Dynamic height adjustment
- Recommended for heavy displays and all-in-one computers
- Height adjustment range: 14.0”
  - Low: 9.0”
  - High: 23.0”
- Monitor extension: 22.4”
- Monitor retraction: 3.0”
- Monitor tilt: +85°/-35°
- Monitor rotation: ±90°
- Weight capacity (per arm):
  - Minimum: 17.6 lbs.
  - Maximum: 42.0 lbs.
- 360° rotation at three points
- VESA quick mount
- Desk clamp and grommet mount included
- Warranty: 15 yr.
- Available on GSA contract

Model #

EDGE-MAX-SLV

esi

800.833. 3746
esiergo.com

© 2018 Fellowes, Inc.

Edge-Max

heavy single monitor arm

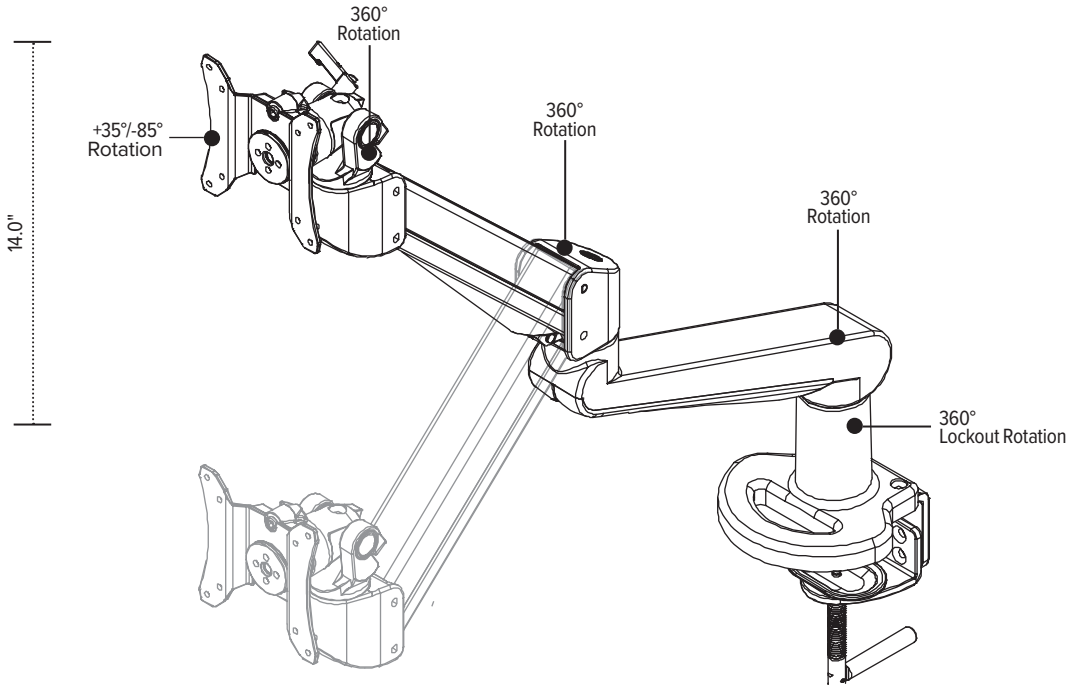

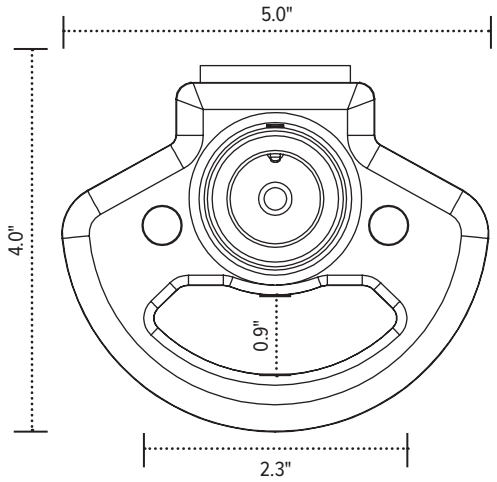

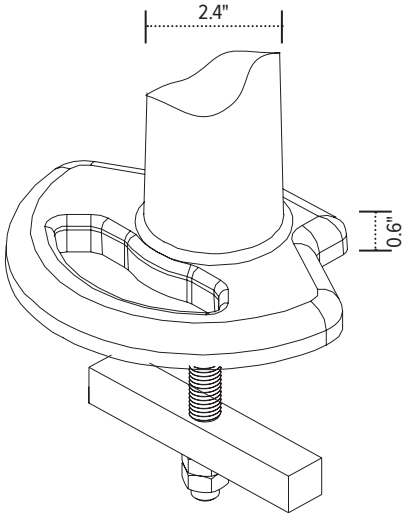

esi

800.833. 3746
esiergo.com

© 2018 Fellowes, Inc.