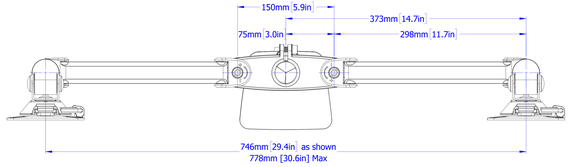
150mm 5.9in
373mm 14.7in
75mm 3.0in
298mm 11.7in
746mm 29.4in as shown
778mm [30.6in] Max

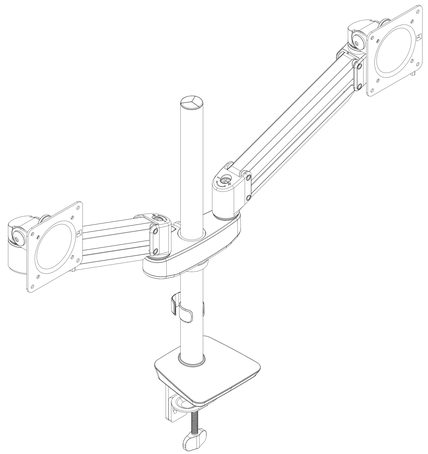

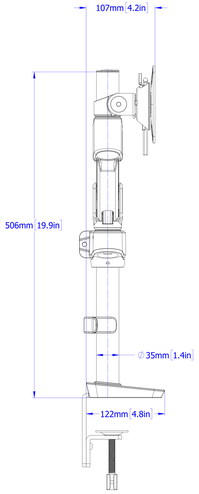
107mm 4.2in
506mm 19.9in
∅ 35mm 1.4in
122mm 4.8in

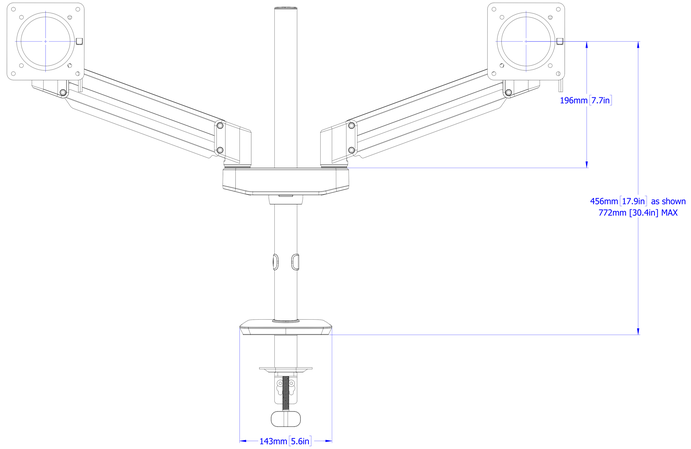
196mm 7.7in
456mm 17.9in as shown
772mm [30.4in] MAX
143mm 5.6in

SENAEX2-M