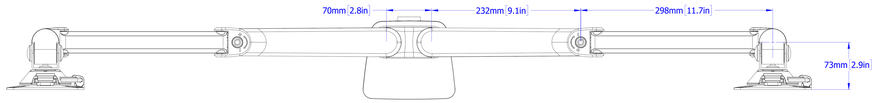
70mm 2.8in
232mm 9.1in
298mm 11.7in
73mm 2.9in

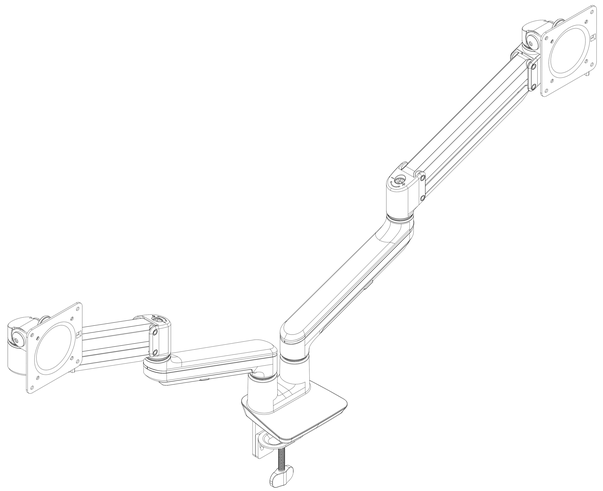

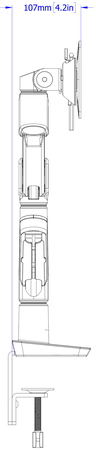
107mm 4.2in

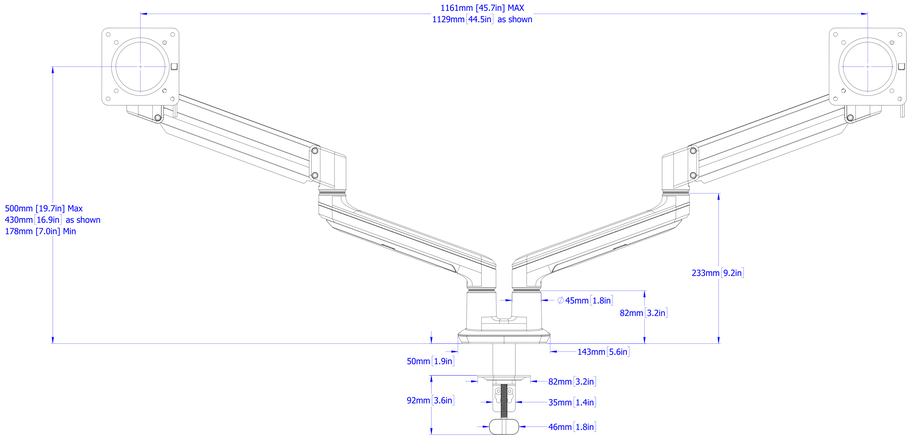
1161mm [45.7in] MAX
1129mm 44.5in as shown
500mm [19.7in] Max
430mm 16.9in as shown
178mm [7.0in] Min
233mm 9.2in
∅ 45mm 1.8in
82mm 3.2in
143mm 5.6in
50mm 1.9in
82mm 3.2in
92mm 3.6in
35mm 1.4in
46mm 1.8in

SENA 2