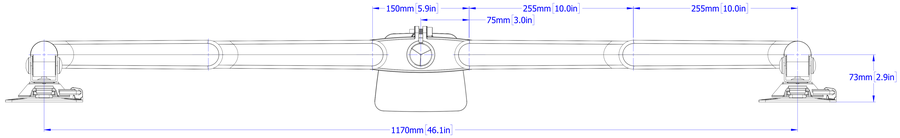
150mm 5.9in
255mm 10.0in
255mm 10.0in
75mm 3.0in
73mm 2.9in
1170mm 46.1in

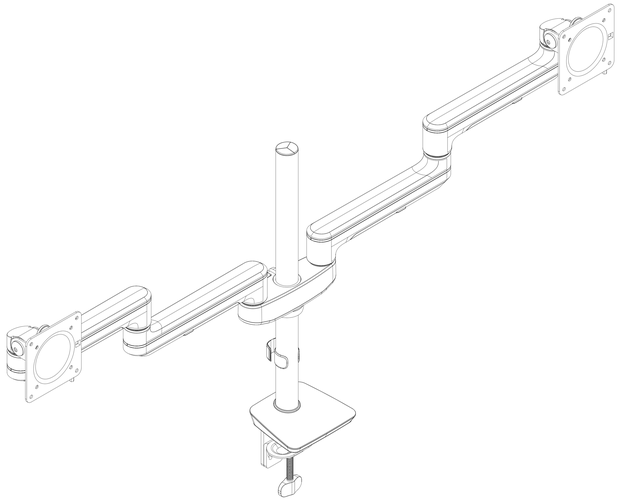

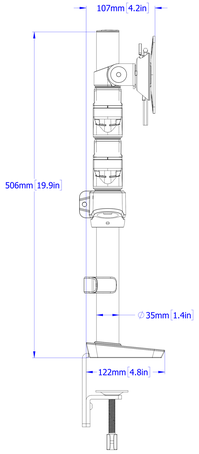
107mm 4.2in
506mm 19.9in
∅ 35mm 1.4in
122mm 4.8in

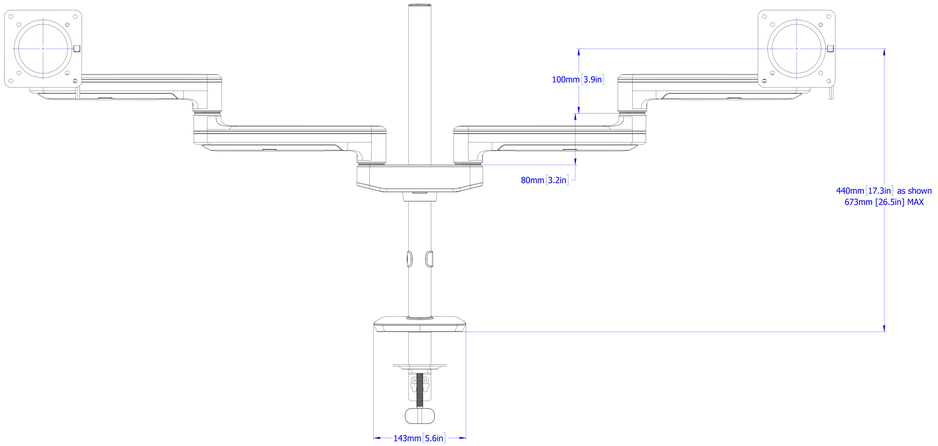
100mm 3.9in
80mm 3.2in
440mm 17.3in as shown
673mm [26.5in] MAX
143mm 5.6in

SENAEX2-FF