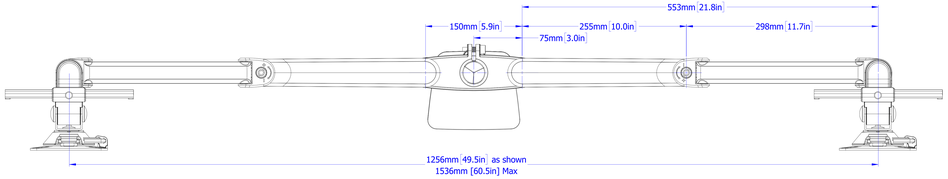
553mm [21.8in]
150mm [5.9in]
255mm [10.0in]
298mm [11.7in]
75mm [3.0in]
1256mm [49.5in] as shown
1536mm [60.5in] Max

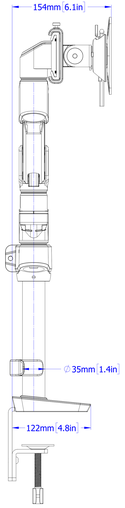
154mm [6.1in]
∅35mm [1.4in]
122mm [4.8in]

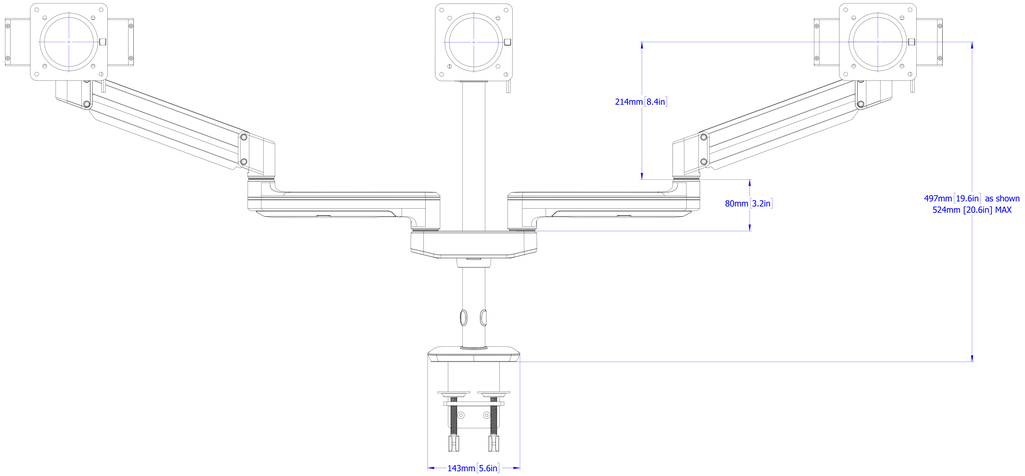
214mm [8.4in]
80mm [3.2in]
497mm [19.6in] as shown
524mm [20.6in] MAX
143mm [5.6in]

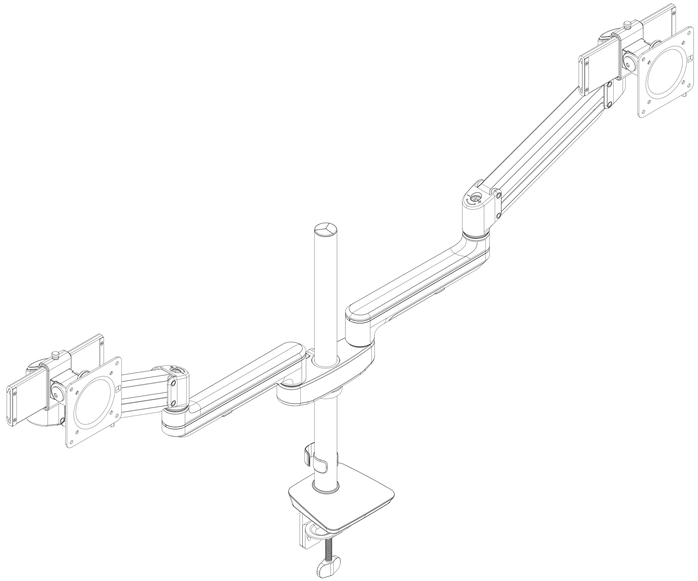

SENAEX3-FMS