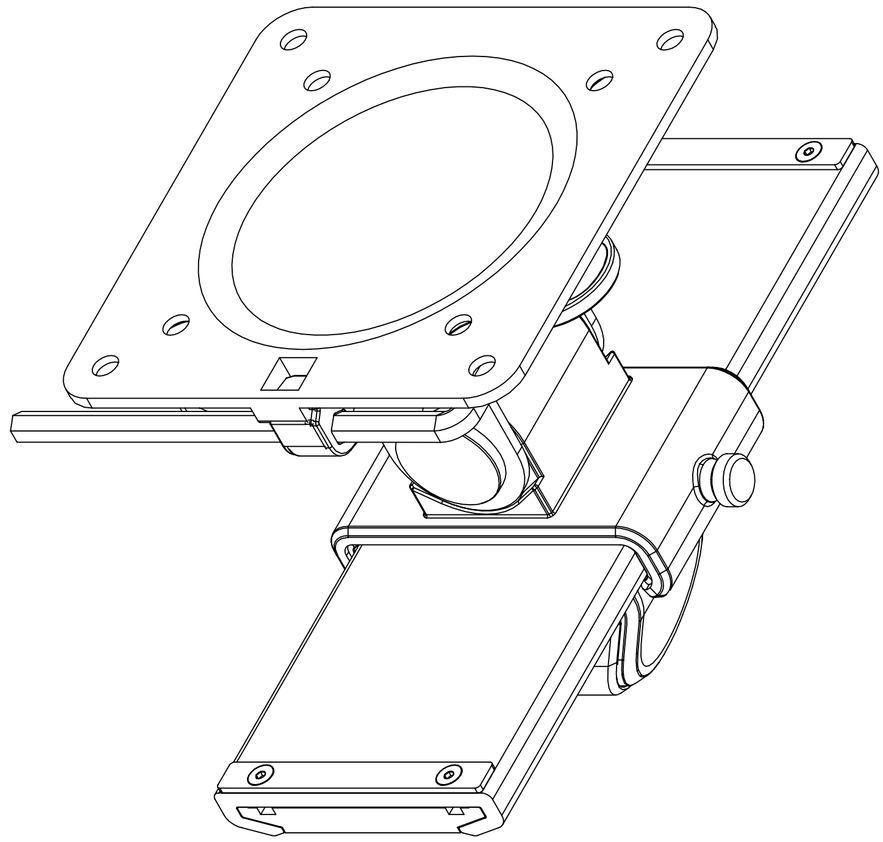

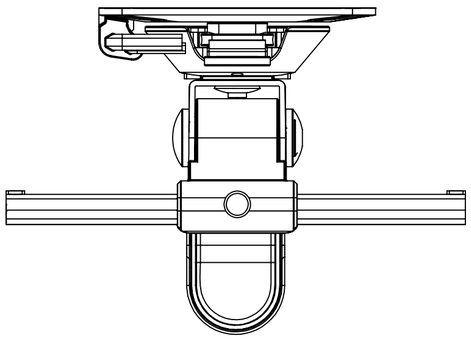

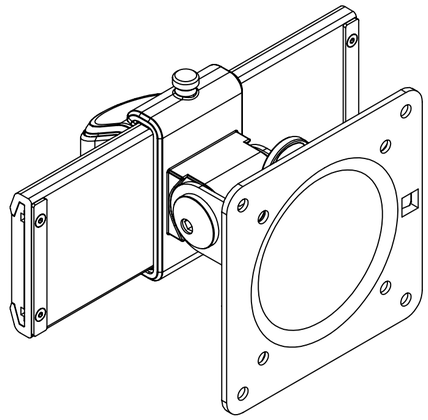

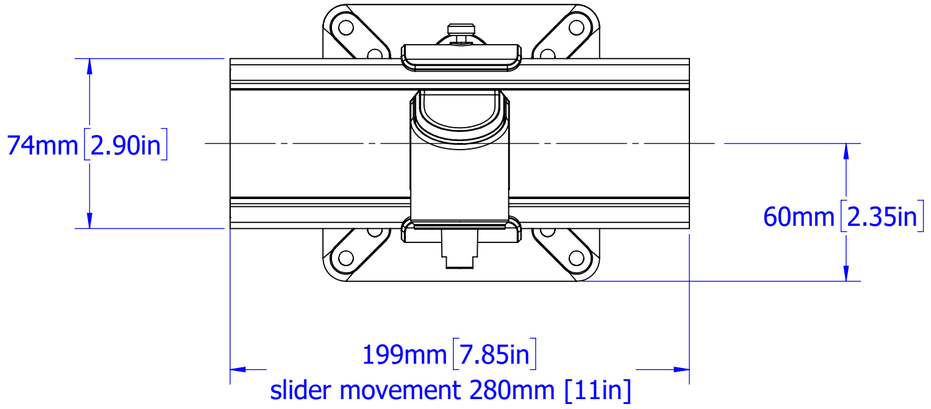
74mm [2.90in]
60mm [2.35in]
199mm [7.85in]
slider movement 280mm [11in]

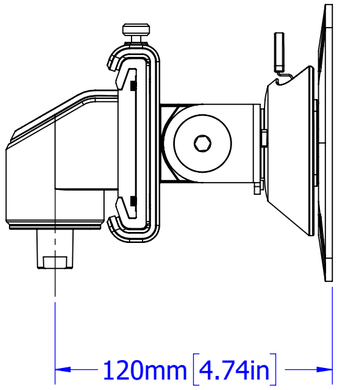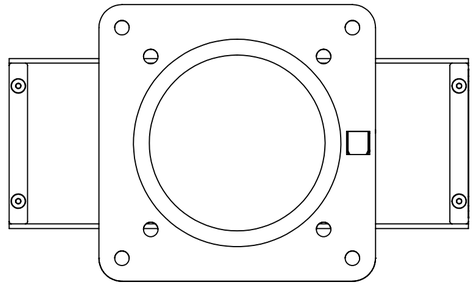
120mm [4.74in]