esi®

Railway™ specification guide

Table of contents

Product Introduction 5

Railway specs and line drawings 6

Configuration Inspiration 8

Custom specification ordering guide. 19

Rail part numbers and specifications. 20

Post kit part numbers and specifications 21

Electrical components 22

New York Black Box 23

Railway Linear pre-configurations 24

Electrical information 30

Railway

Power and data solution

Railway is the perfect solution to get power to your workstations and works seamlessly with our height adjustable bases by accommodating you to lower your table to its lowest setting without any obstructions. Our power and data solution is simple while providing the user with different sizes to accommodate all your different workstation configurations. Our data and power are separated and hidden inside the rail which keeps the workstation clean and organized. As your needs or workspace evolves, so can Railway, by simply reconfiguring it to match your new configured needs. It truly is that easy.

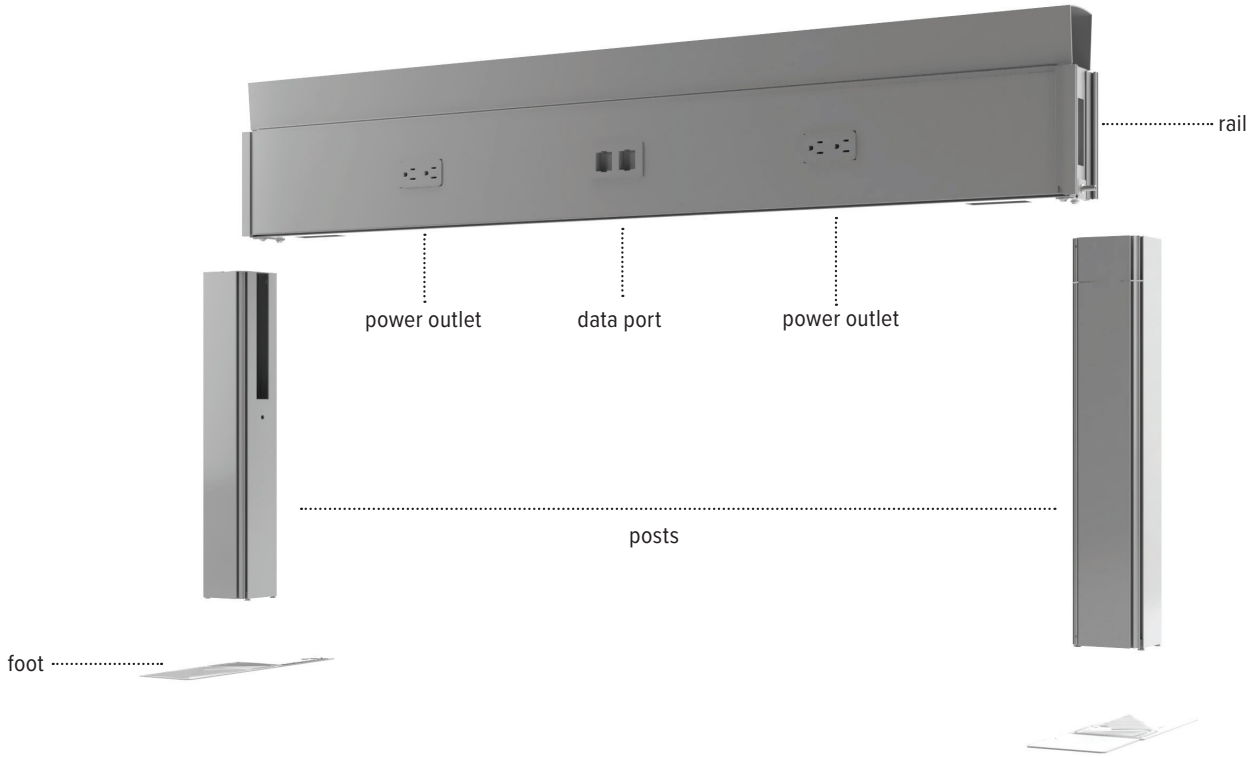

Product Specs

- Four available widths: 36.0”, 48.0”, 60.0”, and 72.0”
- 18.0”h x 3.3”w post
- 3.6”w x 12.0”d T foot - *(standard)*
  3.6”w x 7.8”d L foot - *(optional)*
- Power and data can be utilized on both sides of the rail
- Separate cable/data channel that allows for lay-in cable runs
- Up to ten rails can be connected to each other
  (for anything over ten rails, contact a local electrician)
- Up to eight 125V AC outlets per rail and four inputs for data
- Specify base or ceiling feed
- Flexible power feeds with 3.5" of extension through flexible metal conduit
- UL listed as an Office Furnishing Accessory (UL1286), UL183, and in full compliance with NEC electrical specifications
- Optional electric compliance available for municipal standards such as NY Box, California Title 24, and Chicago
- 20 amps
- Four circuits, eight wire Byrne™ 8trac system
- Up to 13 duplex receptacles per circuit (total of 52 available duplex receptacles allowed)
- 12 AWG line conductors which share a 12 AWG ground and 10 AWG neutral
- Fourth circuit is isolated and dedicated
- Warranty: 15 yr. *(structural)* / 7 yr. *(electrical)*

Available base finishes

Silver -SLV
48"/60" ship in 48 hrs.
36"/72" LT

Black -BLK (LT)
All sizes LT

White -WHT (LT)
All sizes LT

LT = call for on-hand availability

Top view 4-Pack

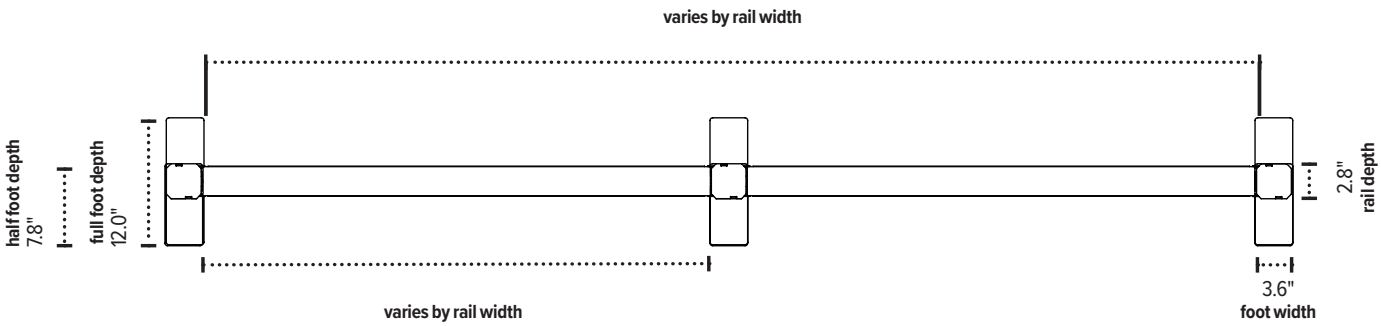

Front view 4-Pack

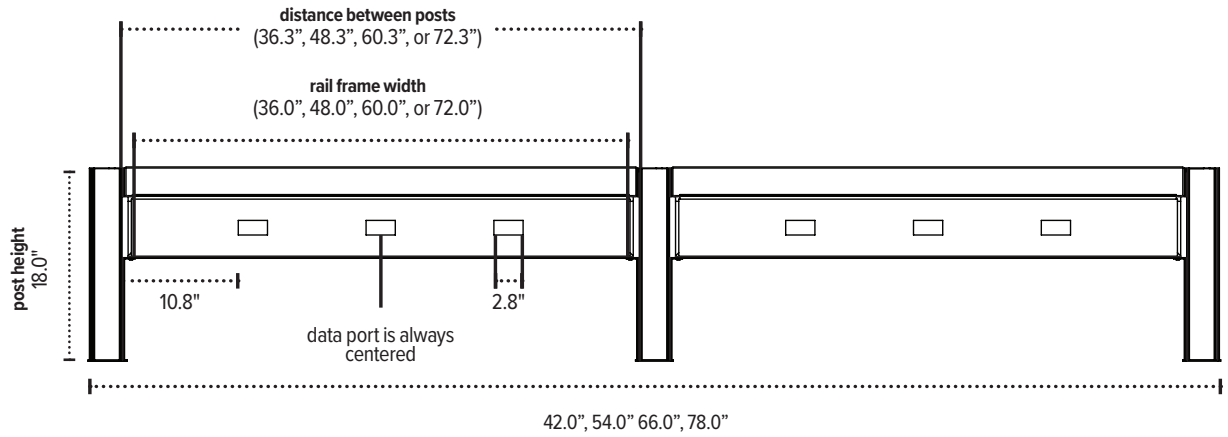

Profile view T-Foot

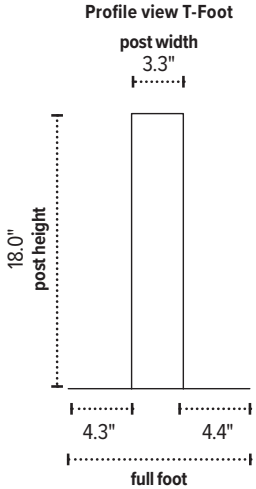

Profile view L-Foot

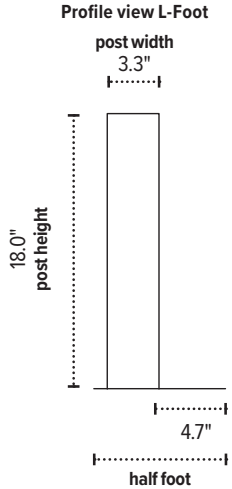

When considering space requirements, it is important to remember to include the total combination of rail and post measurements.

Railway layout inspiration

With endless configurations to choose from, here are just a few common layout examples.

Configuration one

Drawings are not to scale

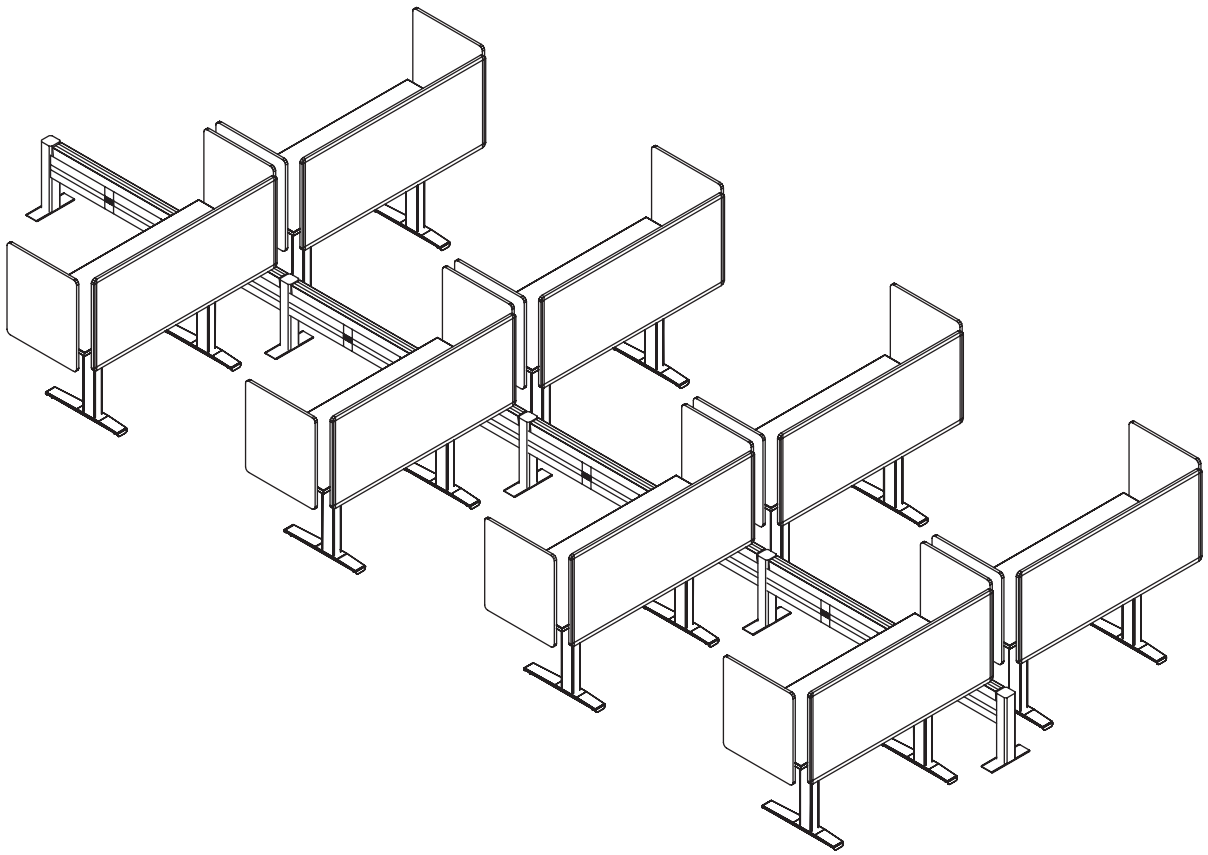

Railway components				
Quantity	**Model#**		**Price**	**Total**
1	RAIL-KIT72-8PK-DBL	Linear 72” 8-pack kit	$6,812	$6,812
	SUBTOTAL			**$6,812**

Additional ESI products				
Quantity	**Model#**		**Price**	**Total**
8	2T-LX-C48-24_ _ _	2-leg TriumphLX electric table base	$1,071	$8,568
8	2R6024-TFL-_ _	60x24 TFL Rectangle worksurface	$340	$2,720
8	CENTRO-58-_ _ _	Centro privacy panel 58” length	$686	$5,488
16	CENTRO-22-_ _ _	Centro privacy panel 22” length	$453	$7,248
8	CONCEAL-_ _ _	Conceal cable manager (22 links)	$77	$616
8	TROUGH-DLX-KIT-BLK	Trough wire manager 18”	$45	$360
	SUBTOTAL			**$25,000**
	GRAND TOTAL			**$31,812**

Configuration two

Drawings are not to scale

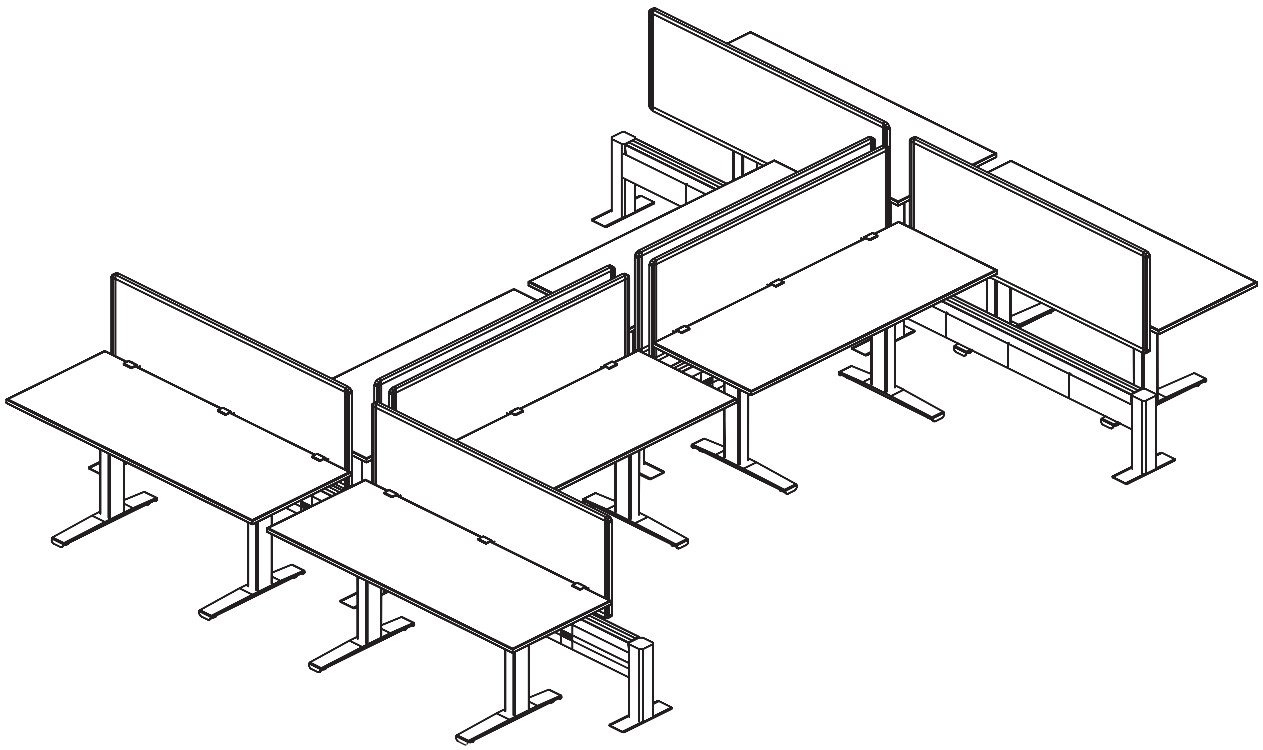

Railway components

Quantity	Model#	Product description	Price	Total
6	RAIL-RWY60-DBL-_ _ _	60” rail	$1,082	$6,492
4	POSTKIT-END-DBL-_ _ _	End posts	$311	$1,244
2	POSTKIT-3WAY-DBL-_ _ _	3-way post	$338	$676
1	POSTKIT-180-DBL-_ _ _	180º post	$325	$325
1	BASEFEED-72-END	72” base-feed	$245	$245
5	RAIL-JUMPER-22	22” jumper	$158	$790
	SUBTOTAL			**$9,772**

Additional ESI products

Quantity	Model#	Product description	Price	Total
8	2T-LX-C48-24-_ _ _	2-leg TriumphLX electric table base	$1,071	$8,568
8	2R6024-TFL-_ _	60x24 TFL Rectangle worksurface	$340	$2,720
8	CENTRO-58-_ _ _	Centro privacy panel 58” length	$686	$5,488
8	CONCEAL-_ _ _	Conceal cable manager (22 links)	$77	$616
8	TROUGH-DLX-KIT-BLK	Trough wire manager 18”	$45	$360
	SUBTOTAL			**$17,752**
	GRAND TOTAL			**$27,524**

Configuration three

Drawings are not to scale

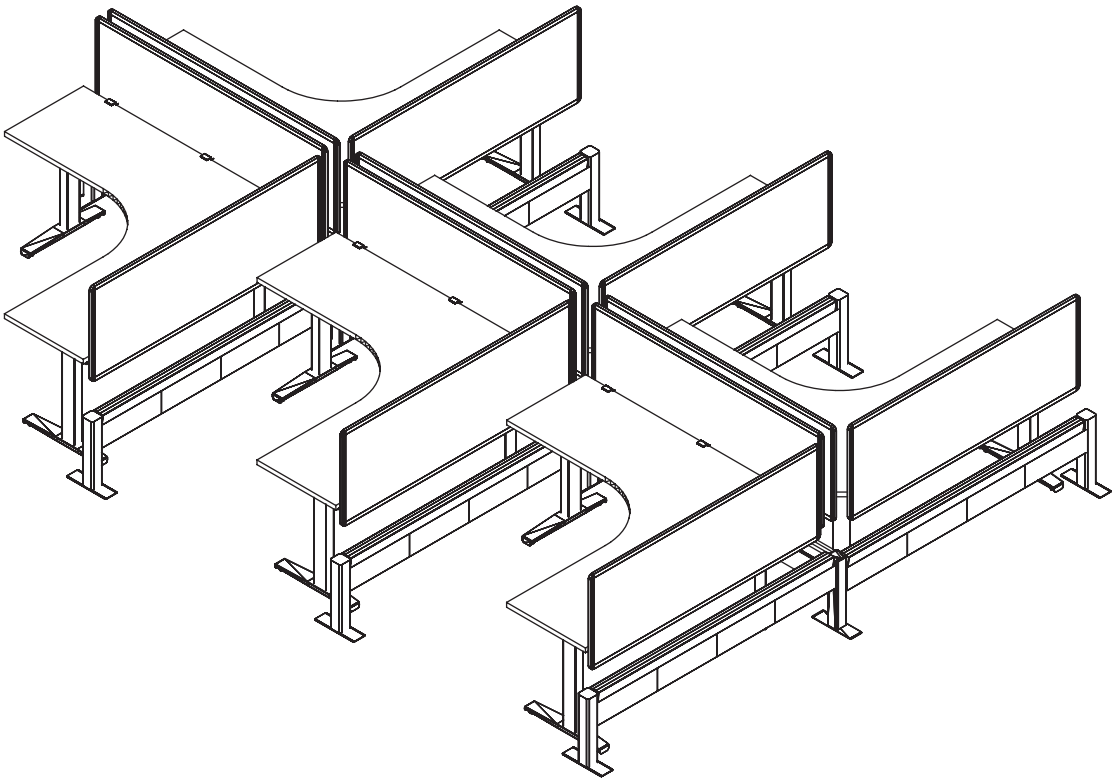

Railway components

Quantity	Model#	Product description	Price	Total
9	RAIL-RWY72-DBL-_ _ _	72” rail	$1,163	$10,467
2	POSTKIT-4WAY-DBL-_ _ _	4-way post	$353	$706
1	POSTKIT-3WAY-DBL-_ _ _	3-way post	$338	$338
7	POSTKIT-END-DBL-_ _ _	End posts	$311	$2,177
1	BASEFEED-72-END	72” base-feed	$245	$245
8	RAIL-JUMPER-22	22” jumper	$158	$1,264
	SUBTOTAL			**$15,197**

Additional ESI products

Quantity	Model#	Product description	Price	Total
6	3VT-LX-C4848-24-_ _ _	3-leg VictoryLX electric table base	$1,826	$10,956
6	3EC727224-HPL-_ _	72x72x24 HPL Equal corner worksurface	$2,044	$12,264
12	CENTRO-70-_ _ _	Centro privacy panel 70” length	$853	$10,236
6	CONCEAL-_ _ _	Conceal cable manager (22 links)	$77	$462
12	TROUGH-DLX-KIT-BLK	Trough wire manager 18”	$45	$540
	SUBTOTAL			**$34,458**
	GRAND TOTAL			**$49,655**

Configuration four

Drawings are not to scale

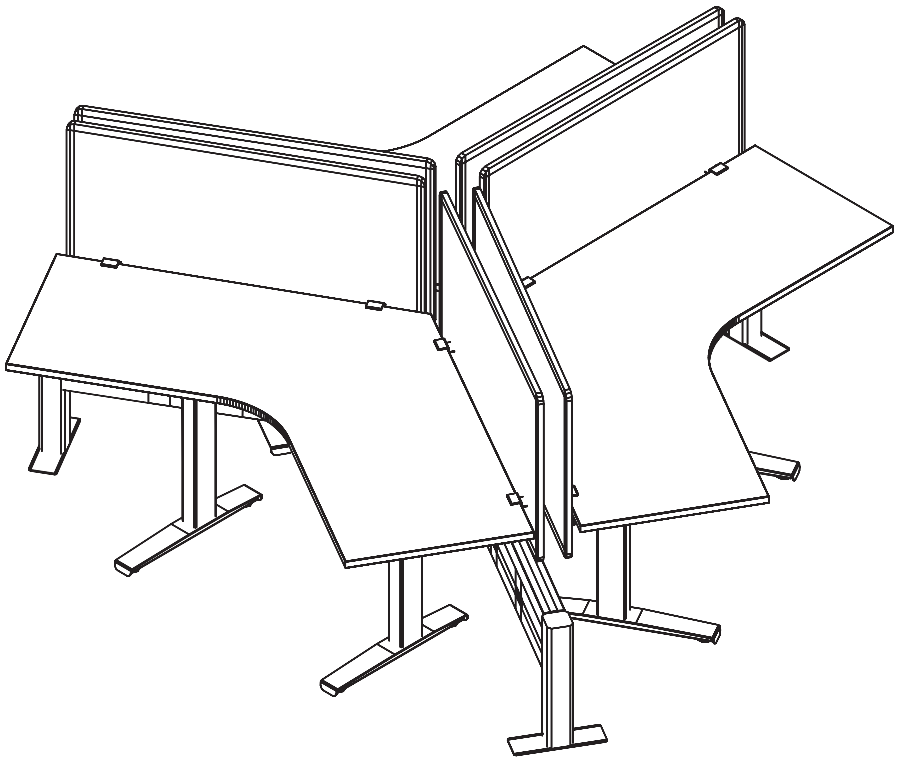

Railway components

Quantity	Model#	Product description	Price	Total
3	RAIL-RWY48-DBL-_ _ _	48” rail	$1,007	$3,021
3	POSTKIT-END-DBL-_ _ _	End posts	$311	$933
1	POSTKIT-120-DBL-_ _ _	120º post	$304	$304
1	BASEFEED-72-END	72” base-feed	$245	$245
2	RAIL-JUMPER-22	22” jumper	$158	$316
	SUBTOTAL			**$4,819**

Additional ESI products

Quantity	Model#	Product description	Price	Total
3	2T-LX-C48-24-_ _ _	2-leg TriumphLX electric table base	$1,071	$3,213
3	120-4824-TFL-_ _	48x24 TFL 120 Degree worksurface	$924	$2,772
6	CENTRO-46-_ _ _	Centro privacy panel 46” length	$638	$3,828
3	CONCEAL-_ _ _	Conceal cable manager (22 links)	$77	$231
3	TROUGH-DLX-KIT-BLK	Trough wire manager 18”	$45	$135
	SUBTOTAL			**$10,179**
	GRAND TOTAL			**$14,998**

Configuration five

Drawings are not to scale

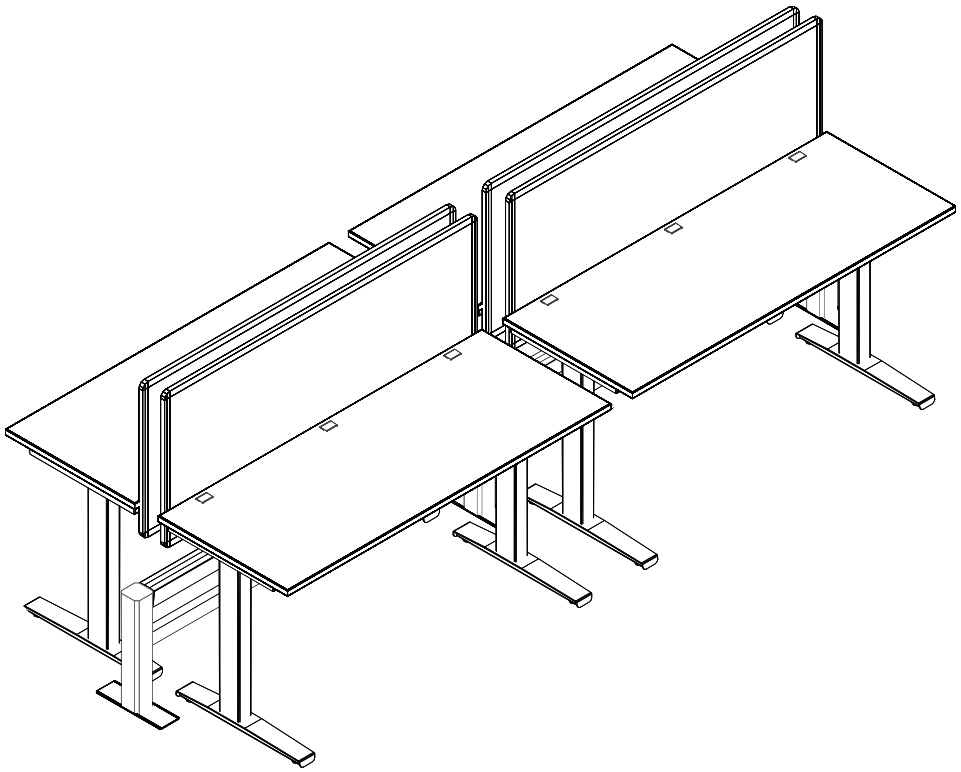

Railway components

Quantity	Model#	Product description	Price	Total
1	RAIL-KIT60-4PK-DBL-_ _ _	Linear 60” 4-pack kit	$3,422	$3,422
	SUBTOTAL			**$3,422**

Additional ESI products

Quantity	Model#	Product description	Price	Total
4	2T-LX-C48-24-_ _ _	2-leg TriumphLX electric table base	$1,071	$4,284
4	2R6024-TFL-_ _	60x24 TFL Rectangle worksurface	$340	$1,360
4	CENTRO-58-_ _ _	Centro privacy panel 58” length	$686	$2,744
4	CONCEAL-_ _ _	Conceal cable manager (22 links)	$77	$308
4	TROUGH-DLX-KIT-BLK	Trough wire manager 18”	$45	$180
	SUBTOTAL			**$8,876**
	GRAND TOTAL			**$12,298**

Configuration six

Drawings are not to scale

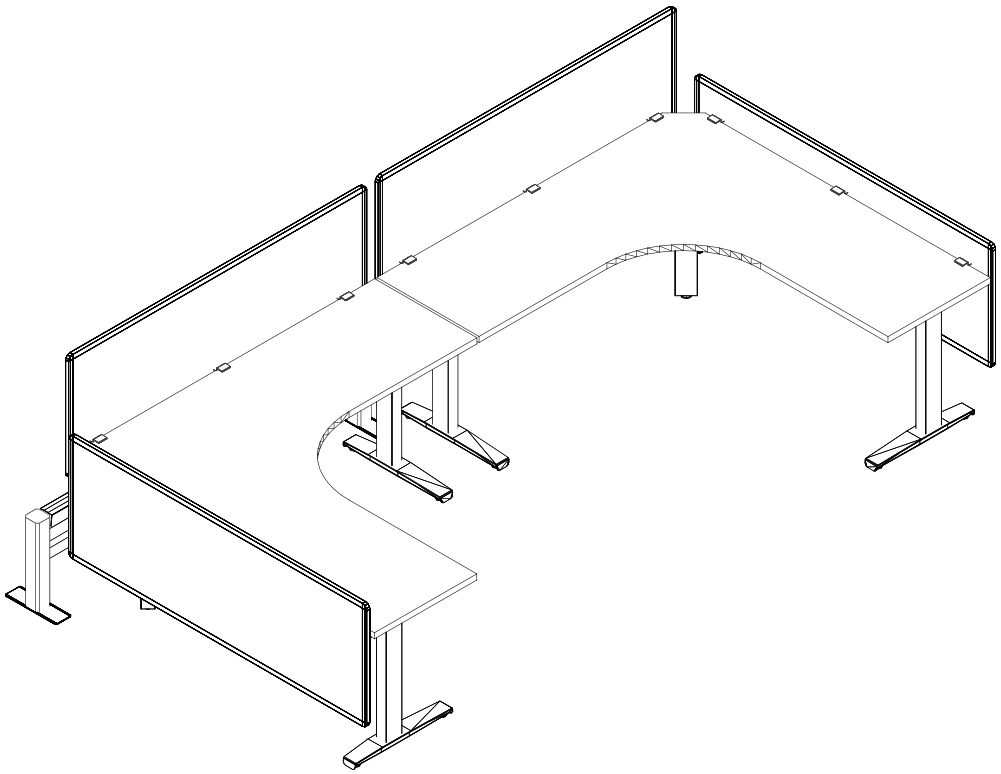

Railway components

Quantity	Model#	Product description	Price	Total
1	RAIL-KIT72-4PK-DBL-_ _ _	Linear 72” 4-pack kit	$3,582	$3,582
	SUBTOTAL			**$3,582**

Additional ESI products

Quantity	Model#	Product description	Price	Total
2	3VT-LX-C4848-24-_ _ _	3-leg VictoryLX electric table base	$1,826	$3,652
2	3EC727224-HPL-_ _	72x72x24 HPL Equal corner worksurface	$2,044	$4,088
4	CENTRO-70-_ _ _	Centro privacy panel 70” length	$853	$3,412
2	CONCEAL-_ _ _	Conceal cable manager (22 links)	$77	$154
2	TROUGH-DLX-KIT-BLK	Trough wire manager 18”	$45	$90
	SUBTOTAL			**$11,396**
	GRAND TOTAL			**$14,978**

Configuration seven

Drawings are not to scale

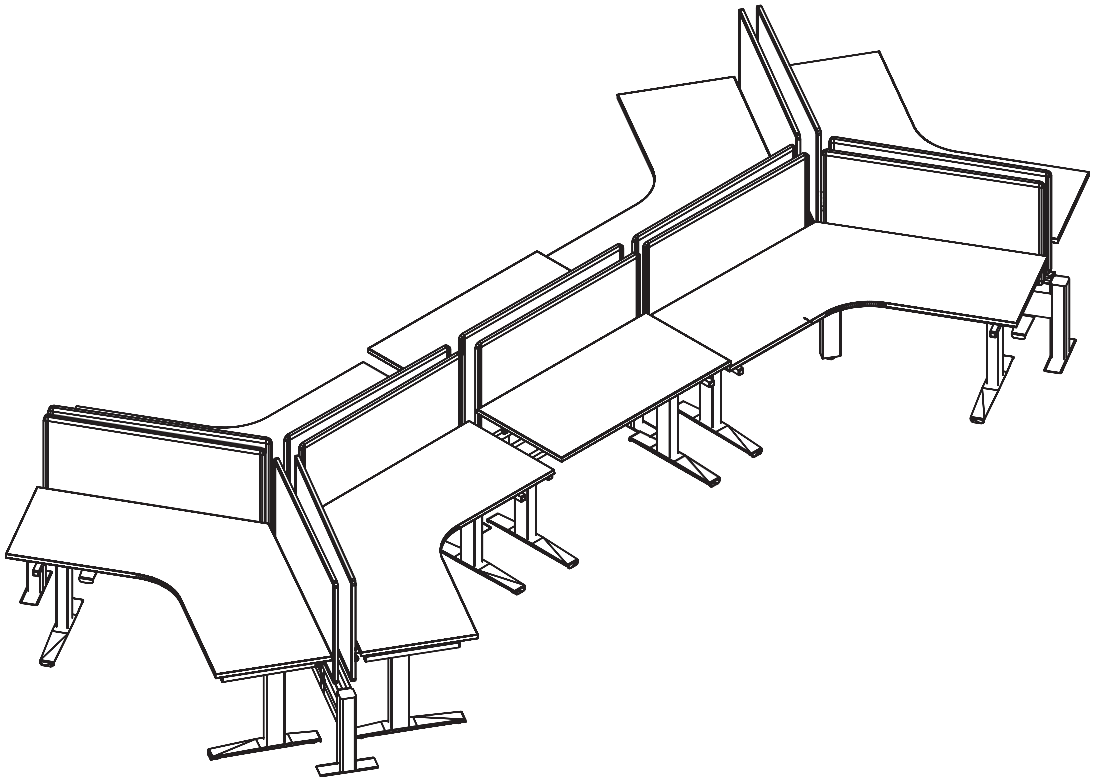

Railway components

Quantity	Model#	Product description	Price	Total
7	RAIL-RWY48-DBL-___	48” rail	$1,007	$7,049
4	POSTKIT-END-DBL-___	End posts	$311	$1,244
2	POSTKIT-180-DBL-___	180º post	$325	$650
2	POSTKIT-120-DBL-___	120º post	$304	$608
1	BASEFEED-72-END	72” base-feed	$245	$245
6	RAIL-JUMPER-22	22” jumper	$158	$948
	SUBTOTAL			**$10,744**

Additional ESI products

Quantity	Model#	Product description	Price	Total
6	3VT-LX-C3636-24-_ _ _	3-leg VictoryLX electric table base	$1,826	$10,956
6	120-4824-TFL-_ _	48x24 TFL 120º worksurface	$924	$5,544
2	2VT-LX-C36-24-_ _ _	2-leg TriumphLX electric table base	$1,229	$2,458
2	2R4824-TFL-_ _	48x24 TFL Rectangle worksurface	$285	$570
14	CENTRO-46	Centro privacy panel 46” length	$638	$8,932
8	CONCEAL	Conceal cable manager (22 links)	$77	$616
8	TROUGH-DLX-KIT-BLK	Trough wire manager 18”	$45	$360
	SUBTOTAL			**$29,436**
	GRAND TOTAL			**$40,180**

Configuration eight

Drawings are not to scale

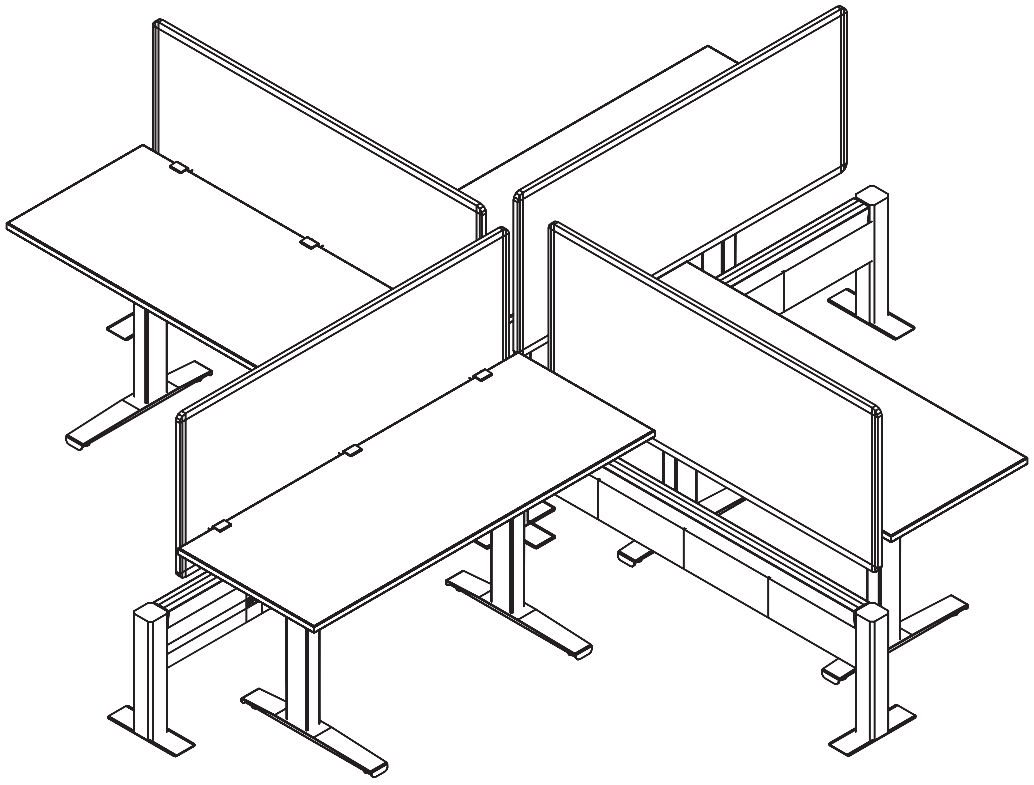

Railway components

Quantity	Model#	Product description	Price	Total
4	RAIL-RWY60-DBL-_ _ _	60” rail	$1,082	$4,328
4	POSTKIT-END-DBL-_ _ _	End posts	$311	$1,244
1	POSTKIT-4WAY-DBL-_ _ _	4-way post	$353	$353
1	BASEFEED-72-END	72” base-feed	$245	$245
3	RAIL-JUMPER-22	22” jumper	$158	$474
	SUBTOTAL			**$6,644**

Additional ESI products

Quantity	Model#	Product description	Price	Total
4	2T-LX-C48-24-_ _ _	2-leg TriumphLX electric table base	$1,071	$4,284
4	2R6024-TFL-_ _	60x24 TFL Rectangle worksurface	$340	$1,360
4	CENTRO-58-_ _ _	Centro privacy panel 58” length	$686	$2,744
4	CONCEAL-_ _ _	Conceal cable manager (22 links)	$77	$308
4	TROUGH-DLX-KIT-BLK	Trough wire manager 18”	$45	$180
	SUBTOTAL			**$8,876**
	GRAND TOTAL			**$15,520**

ALEXEY BRODOVITCH

Railway custom configurations

The Railway can be customized with endless configurations to meet virtually any needs.

Custom specification ordering guide

Follow the four steps below to build custom configurations not already include in our standard kits.
For additional questions contact Customer Service at 1-800-833.3746.

Individual component model numbers are also available in this section.

1 Select your rail

- Specify the length of rail that you need. Available in sizes 36.0", 48.0", 60.0", or 72.0". (see page 20)
- Specify color. Available in silver, black, and white.
  - All finishes are LT (lead time) with the exception of the 48.0" and 60.0" silver Railways, which ship within 48-72 hours.
- Specify the rail.
  - A rail includes (4) four ports for data and/or phone, two on each side. It includes (4) four duplex power receptacles, two on each side, to fully power both sides of the Railway.
  - ESI offers different code compliant rails for New York City (NY), Chicago and California Title 24.

Rail

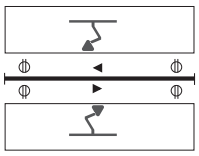

2 Select your posts:

End post | *90° post* | *180° post and 180° post knock out* | *3-way post* | *4-way post* | *120° post*

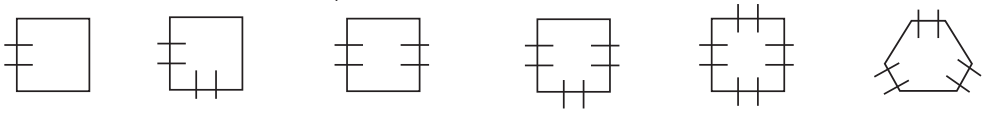

- Each Railway requires (2) two posts per rail.
- All post kits include a 12.0" T-foot by default. An L-foot is only intended for applications going against a wall and not intended for open floor plans.

3 Specify base or ceiling feed

- 72.0" base feed is standard.
- 144.0" ceiling feeds are available for drop in power. Integrated power pole specify separately.
- ESI offers different code compliant feeds for NY Box and California Tile 24. (see page 22)
- Chicago Code Railways do not include receptacles, base/ceiling feed or jumpers. Please contact your local electrician for sourcing these items.

4 Specify the number of jumpers based on your layout

- There should be one less jumper than rail for specifications, see page 22.
- Chicago Code Railways do not include receptacles, base/ceiling feed or jumpers. Please contact your local electrician for sourcing these items.

1 Select the rail type and size:

Rails are available in lengths of 36.0", 48.0", 60.0", and 72.0” with three finish options. It includes data and power receptacles. Does not include posts, feeds, or jumpers. The posts will each add an additional 3.3" to the overall length of each rail.

New York City (NY) will need a special rail. See page 23

Code compliant rails may incur a longer lead time. Please contact Customer Service for a quote.

Rail includes:

- Top data cover in matching size and finish for data cable management
- (4) Four duplex power receptacles
- (2) Two data receptacles with (2) two ports each for data and phone
- (1) One set of connectors for post mounting
- (2) Two blank plate covers for covering unused ports

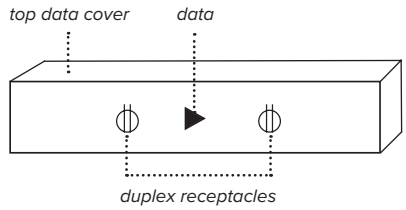

Rails

Model #	List		Model #	List	
RAIL-RWY36-DBL-_ _ _	$962	**LT**	RAIL-RWY60-DBL-_ _ _	$1,082	**LT**
RAIL-RWY36-DBL-CHI-_ _ _	$962	**LT**	RAIL-RWY60-DBL-CHI-_ _ _	$1,082	**LT**
RAIL-RWY36-DBL-CALI-_ _ _	$962	**LT**	RAIL-RWY60-DBL-CALI_ _ _	$1,082	**LT**
RAIL-RWY48-DBL-_ _ _	$1,007	**LT**	RAIL-RWY72-DBL-_ _ _	$1,163	**LT**
RAIL-RWY48-DBL-CHI-_ _ _	$1,007	**LT**	RAIL-RWY72-DBL-CHI_ _ _	$1,163	**LT**
RAIL-RWY48-DBL-CALI-_ _ _	$1,007	**LT**	RAIL-RWY72-DBL-CALI-_ _ _	$1,163	**LT**

Available finishes

Silver -SLV

- *48.0"/60.0" ship in 48 hrs.*
- *36.0"/72.0" LT*

LT Black -BLK

LT White -WHT

LT = call for on-hand availability

2 Select the post kit:

Post kit includes:

- (1) One post in 90°, 180°, 180°KO, 3-way, 4-way, 120°, or end configuration
- (1) One 12.0" T-foot including a hardware pack for foot mounting
- (1) One mounting bracket per cutout for rail mount (example: 3-way includes (3) three brackets, 180° and 90° both contain (2) two
- (1) One top cap

What post do I need?

- At least (2) two end posts are always recommended for each rail for a clean finished look. An end post goes on a rail anywhere that will NOT connect to an additional rail. Think of them as the "ends" of the configuration. The power feed will also come into the rail through an end post or 180°KO.
- For linear configurations of multiple connected rails, a 180° or 180°KO post is necessary for every rail being connected. Think of these as the "bridge" between rails in a straight line.
- 90°, 3-way, and 4-way post kits are needed wherever a configuration requires connections from different or multiple angles.
- Post dimensions are 3.3" wide by 3.3" deep, by 18.0" high.

End posts

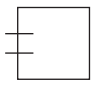
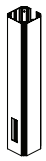

Model #	List	
POSTKIT-END-DBL-_ _ _	$311	**LT**

3-way posts

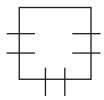

Model #	List	
POSTKIT-3WAY-DBL-_ _ _	$338	**LT**

90° posts

Model #	List	
POSTKIT-90-DBL-_ _ _	$325	**LT**

4-way posts

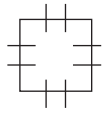

Model #	List	
POSTKIT-4WAY-DBL-_ _ _	$353	**LT**

180° posts

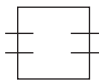

Model #	List	
POSTKIT-180-DBL-_ _ _	$325	**LT**

120° posts

Model #	List	
POSTKIT-120-DBL-_ _ _	$304	**LT**

* cap in lieu of foot

180° knock out posts

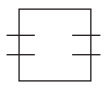

Model #	List	
POSTKIT-180-KO-DBL-_ _ _	$290	**LT**

A T-foot is included with all postkits excetpt 120°. If an L-foot is need please specify quanity on the order.

Wall application

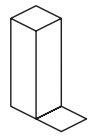

T-foot

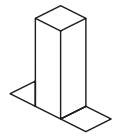

LT = call for on-hand availability

3 Select the power feed:

We offer a ceiling feed for open floor plans with drop in power or a base feed for hard wired, wall fed power applications.

What feed do I need?

- The standard is the 72.0" base feed. This is for hardwiring power directly from the wall into the rail. The power feed can only come through an end post or 180°KO.
- A 144.0" ceiling feed is used when power must be hardwired and "dropped" in from the ceiling. Specify power pole separately.
- ESI offers special feeds that comply with municipal standards for building and power such as NY Box (-NY) and Liquid tight (-CALI). Please check if any of these special power feeds are needed on the project.
- Chicago Code Railways do not include receptacles, base/ceiling feed or jumpers. Please contact your local electrician for sourcing these items.

receptacle

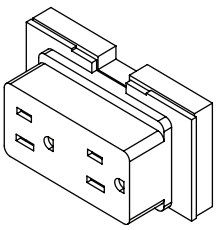

Ceiling feed

Model #	List	
CEILINGFEED-144	$299	**LT**
CEILINGFEED-144-NY	$611	**LT**
CEILINGFEED-144-CALI	$485	**LT**

Base feed

Model #	List	
BASEFEED-72-END	$245	**LT**
BASEFEED-72-END-NY	$381	**LT**
BASEFEED-72-END-CALI	$377	**LT**

Power pole

Model #	List	
RAIL-POLE-142-BLK	$344	**LT**

- The pole is 3.0” x 3.75” x 142” long.
- It attaches to the post on its 3.0” side. Which means it will lengthen the Railway by 3.75”
- Only available in black plastic

LT = call for on-hand availability

4 Select the number of jumpers:

Jumpers connect power from rail to rail.

How many jumpers do I need?

- (1) One jumper for every rail connected in the configuration beyond the initial rail connected to your base feed.
- Chicago Code Railways do not include receptacles, base/ceiling feed or jumpers. Please contact your local electrician for sourcing these items.

180°

120°

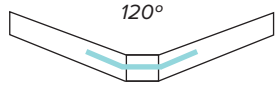

Rail jumper

Model #	List	
RAIL-JUMPER-22	$158	**LT**

LT = call for on-hand availability

90°

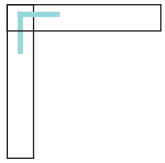

3-way

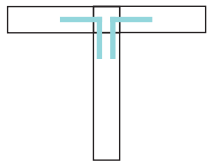

4-way

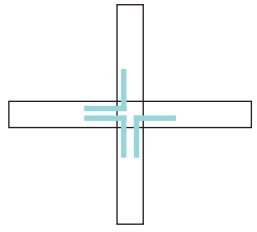

New York City power rail kit

Due to the New York City electrical code requirements we provided a specific NYC power rail kit that meets all specification requested by the city. All parts are provided and need to be installed by a licensed electrician per the code.

The NYC power rail kit is to be used as the designated infeed rail. All other rails in the configuration can be our standard rails

- Please consult local electrician for power draw when connecting more than 5 rails to one endfeed.

NY Kit includes:	**Model #**
(1) One - NY Power block	NYCPWRBLK00#
(1) One - Jumper	RAIL-JUMPER-22
(1) One - Box	RAIL-NYBOX#

NY City power rail kit

Model #	**List**
RAIL-POWER-NYCKIT-_ _ _	$1,099 **LT**

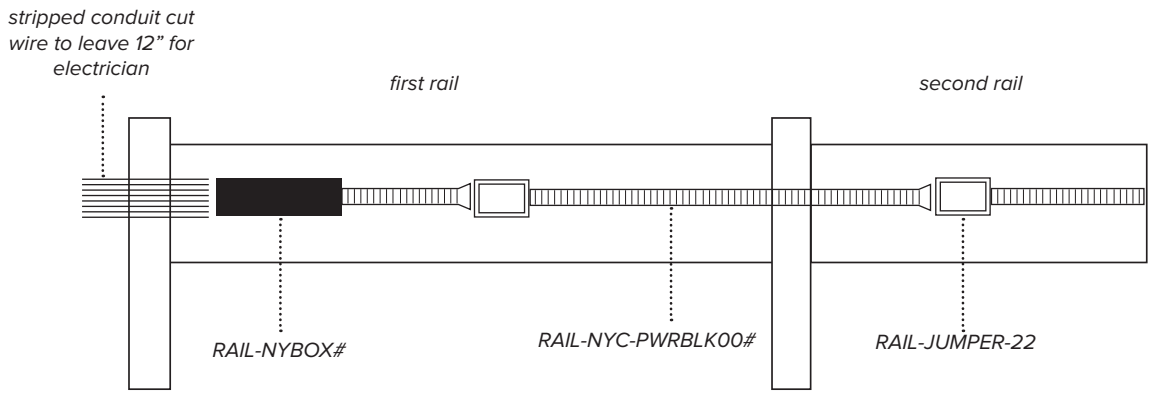

convert to size needed

NY Power Kit does not include a railway shell. A shell will need to be purchased to put the power kit in. Please talk to your customer service representative for more information.

Railway linear pre-configurations

To make ordering easy, there are various linear pre-configurations available.

Linear configurations

Drawings are not to scale

2-pack *(up to two users)*

Run includes:

(2) Two - End posts
(1) One - Rails in the size of your choosing, double run
(1) One - BASEFEED-72-END
(2) Two - T-feet
(4) Four - Receptacles

Model #	List price
RAIL-KIT36-2PK-DBL-_ _ _	$1,768
RAIL-KIT48-2PK-DBL-_ _ _	$1,812
RAIL-KIT60-2PK-DBL-_ _ _	$1,886
RAIL-KIT72-2PK-DBL-_ _ _	$1,968

Posts, rails, and feet will match specified finish

- A **2-pack** is a one to two user configuration
- Up to **two** users can be provided power and data based on specified run
- Kits not applicable in New York, Chicago, or California
- Pricing does not include height adjustable desks and screens

4-pack *(up to four users)*

Run includes:

(2) Two - End posts
(1) One - 180° post
(2) Two - Rails in the size of your choosing, double run
(1) One - BASEFEED-72-END
(3) Three - T-feet
(1) One - Jumper
(8) Eight - Receptacles

Model #	List price
RAIL-KIT36-4PK-DBL-_ _ _	$3,184
RAIL-KIT48-4PK-DBL-_ _ _	$3,271
RAIL-KIT60-4PK-DBL-_ _ _	$3,422
RAIL-KIT72-4PK-DBL-_ _ _	$3,582

Posts, rails, and feet will match specified finish

- A **4-pack** is a two to four user configuration
- Up to **four** users can be provided power and data based on specified run
- Kits not applicable in New York, Chicago, or California
- Pricing does not include height adjustable desks and screens

Linear configurations

Drawings are not to scale

2-pack

profile view

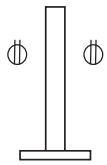

elevation

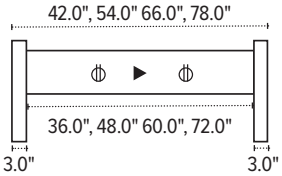

plan view

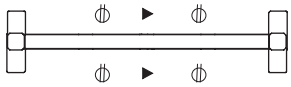

4-pack

profile view

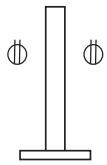

elevation

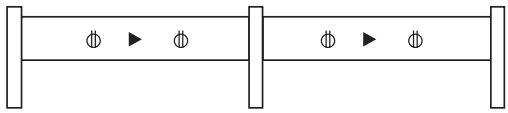

plan view

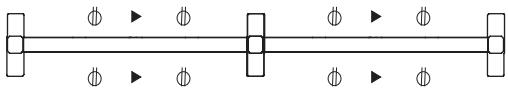

Electrical outlet(s) ▶ *Data/Telephone outlet(s)*

Linear configurations

Drawings are not to scale

6-pack *(up to six users)*

Run includes:

(2) Two - End posts
(2) Two - 180° posts
(3) Three - Rails in the size of your choosing, double run
(1) One - BASEFEED-72-END
(4) Four - T-feet
(2) Two - Jumpers
(12) Twelve - Receptacles

Model #	List price
RAIL-KIT36-6PK-DBL-_ _ _	$4,600
RAIL-KIT48-6PK-DBL-_ _ _	$4,733
RAIL-KIT60-6PK-DBL-_ _ _	$4,957
RAIL-KIT72-6PK-DBL-_ _ _	$5,196

Posts, rails, and feet will match specified finish

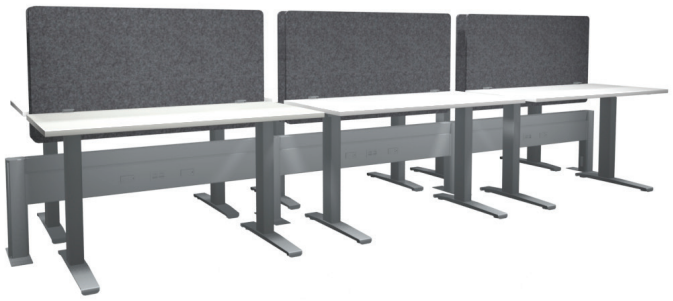

- A **6-pack** is a three to six user configuration
- Up to **six** users can be provided power and data based on specified run
- Kits not applicable in New York, Chicago, or California
- Pricing does not include height adjustable desks and screens

8-pack *(up to eight users)*

Run includes:

(2) Two - End posts
(3) Three - 180° posts
(4) Four - Rails in the size of your choosing, double run
(1) One - BASEFEED-72-END
(5) Five - T-feet
(3) Three - Jumpers
(16) Sixteen - Receptacles

Model #	List price
RAIL-KIT36-8PK-DBL-_ _ _	$6,016
RAIL-KIT48-8PK-DBL-_ _ _	$6,193
RAIL-KIT60-8PK-DBL-_ _ _	$6,493
RAIL-KIT72-8PK-DBL-_ _ _	$6,812

Posts, rails, and feet will match specified finish

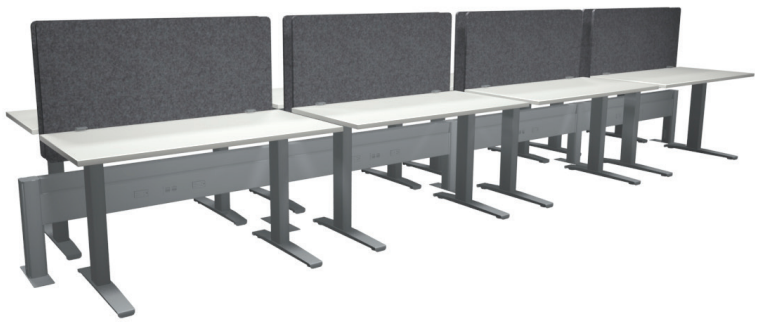

- An **8-pack** is a four to eight user configuration
- Up to **eight** users can be provided power and data based on specified run
- Kits not applicable in New York, Chicago, or California
- Pricing does not include height adjustable desks and screens

Linear configurations

Drawings are not to scale

6-pack

profile view

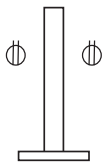

elevation

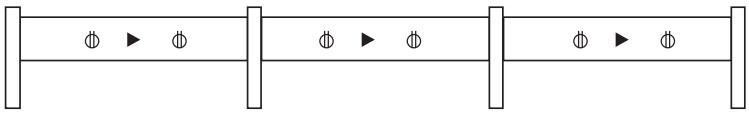

plan view

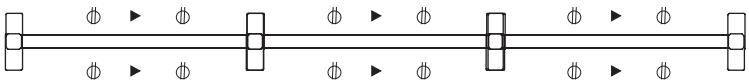

8-pack

profile view

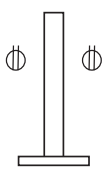

elevation

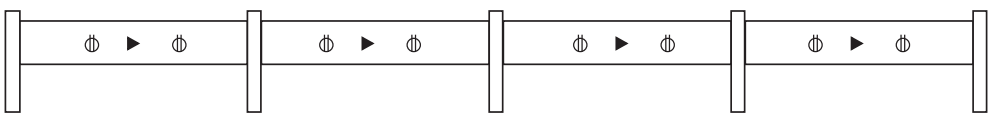

plan view

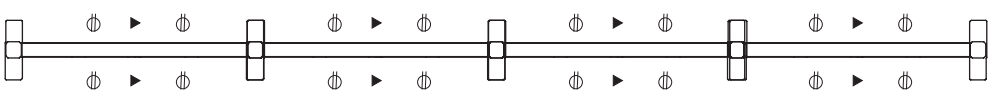

◍ *Electrical outlet(s)* ▶ *Data/Telephone outlet(s)*

BYRNE electrical information

Circuitry/Keying

The Byrne 8-Trac System is rated for 20 amps allowing the use of 4 circuits with 4 line conductors, 2 neutrals and 2 grounds. Under NEC requirements, up to 13 duplex receptacles maybe used per circuit, with a total of 52 available duplex receptacles if all circuits are used, per single power entry. The line conductors are 12 AWG, and share a 12 AWG ground and a 10 AWG neutral. The fourth circuit is isolated and dedicated, and is serviced by its own line conductor, neutral and isolated ground. Alternate circuit diagrams are available. The Byrne System can be wired in both single and three-phase configurations, 240/120V, 208/120V respectively. Additionally, a 3 hot, 3 neutral, 2 ground (3-3-2) wiring system is available.

3+D wiring diagram 208/120V

(3+D keying is designated as -3- in part numbers)

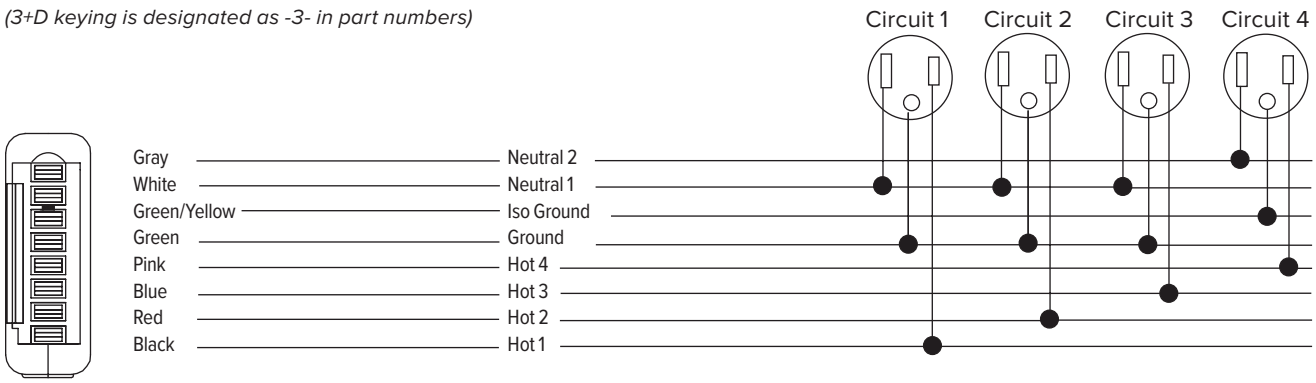

esi®

Fellowes Brands | FAMILY BUSINESS SINCE 1917

© 2022 Fellowes, Inc.